WHAT IS AN AUTO-SLACK SAVER?

The **AUTO-SLACK SAVER** is a repair device designed to repair the locator tab/bushing area on the Haldex style ABA and S-ABA slack adjusters.

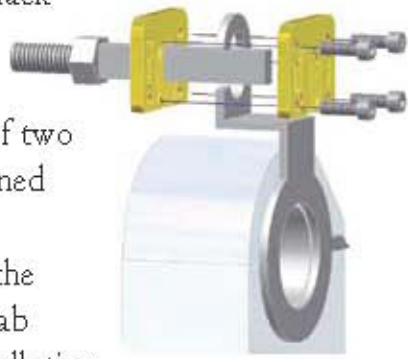

It consists of two specially designed plates mating together over the worn locator tab area. This installation eliminates replacing the complete slack adjuster or constantly replacing pins and bushings due to this common problem.

— PAST —

Previous to the **AUTO-SLACK SAVER** your only option when confronting a worn bushing area was to replace the complete slack adjuster at a considerable cost in parts and labor:

From This

Worn

To This

New

RESULT:		
	New slack adjuster	$65.00*
	Service shop labor	$65.00*
	Total	$130.00

— PRESENT —

Anyone can install the **AUTO-SLACK SAVER** in 10 minutes or less without expensive parts or labor:

From This

Worn

To This

w/Auto-Slack Saver

RESULT:		
	AUTO-SLACK SAVER	$20.00
	Labor	$10.00
	Total	$30.00

**Parts and labor may vary.*

— COST SAVINGS —

There's not a better time to take a look at cost saving maintenance procedures than now.

Savings:

$100.00	/	Wheel
$400.00	/	Trailer
$4000.00	/	10 Units
$8000.00	/	20 Units
$40,000.00	/	100 Units
$200,000.00	/	500 Units
$400,000.00	/	1000 Units

— TRIED / TESTED —

The **AUTO-SLACK SAVER** has been in the field since 2007, logging over 400,000 miles to date with excellent results.

Example:

3½ years in service
427,000 miles